AIA Florida

Provider #: A022

Fair Housing vs. Florida Accessibility Code – Who, What, When, Where & How

AIA #CONV20FHFA / FBC #965

Miguel A. Rodriguez, FAIA

Copyright Materials

This presentation is protected by US and International Copyright laws. Reproduction, distribution, display and use of the presentation without written permission of the speaker is prohibited.

AIA Florida

© AIA Florida 2020

CONTINUING EDUCATION AIA

Learning Objectives:

problem:

today's mixed-use residential buildings often require the application of multiple accessibility requirements at different places throughout the building.

participants will:

- recognize the primary accessibility requirements applicable to mixed-use residential buildings.
- become familiar with the unique requirements of each.
- understand how they integrate with their designs, and
- be able to apply them to their projects.

Applicable Accessibility requirements:

always applicable:

- Fair Housing Act Amendments

sometimes applicable:

- Florida Accessibility Code for Building Construction (2020 FBC-Accessibility, 7th Edition)
  are there public accommodations?
- Americans with Disabilities Act
  are there public accommodations?
- Uniform Federal Accessibility Standards
  is federal funding involved?
  are you subject to Section 504 of the Rehabilitation Act?
- Various versions of ANSI A117.1?
  or other safe harbors

History of the FHAA:

Fair Housing Act was passed in 1968

- Fair Housing Act Amendments, passed in 1988

  included new disability coverage

Enforced by:

- US Department of Housing & Urban Development
- US Department of Justice
- State and Local Housing Enforcement Agencies
  (Florida Commission on Human Relations)
- Private Lawsuits in Federal or State Courts

History of the FHAA

- in Florida: FS 760 – Fair Housing Act

state agencies with building construction regulation responsibility or local governments, as appropriate, shall review the plans and specifications for the construction of covered multifamily dwellings to determine consistency with the requirements of this subsection.

> *"The Office of General Counsel has consistently interpreted this provision in the statute to require the local building official with authority over building construction, to review all plans and specifications for the construction of multifamily dwellings, to determine consistency with the requirements of the Fair Housing Act (Act) as set forth in section 760.23(10), F.S.*
>
> *The local building officials' authority is grounded in this state statute as well as any local ordinance or code, to enforce this provision in the Act.*
>
> *If the plans and specifications are not consistent with the Act, the local building official is entitled to withhold a certificate of occupancy or withhold issuing a building permit, if the plans/specifications do not comply with the standards set forth in 760.23(10), F. S. failure to enforce this section of the Act, may subject local building officials to lawsuits brought by aggrieved persons, under the Act."*
>
> Evelyn D. Golden,
> Assistant General Counsel
> Florida Commission on Human Relations

Florida Accessibility Code for Building Construction:

Enacted as a stand-alone Statute.

bundled with the Florida Building Code as FBC-Accessibility

Enforced by:

- Local Building Departments

  part of permit plan review

- Private Lawsuits in Federal or State Courts

Florida Accessibility Code for Building Construction:

not applicable to residential:

"101.1.3 General and, 201.1 Scope. *This code establishes standards for accessibility to places of public accommodation and commercial facilities by individuals with disabilities. This code shall also apply: to state and local government facilities pursuant to Section 553.503, F.S.; to private clubs pursuant to Section 553.505, F.S.; and to residential buildings pursuant to Section 553.504(2), F.S., and the ADA Standards for Accessible Design…"*

clarified by Building Commission, Declaratory Statement, dated: April 9, 2013

Answer to Question #1: "*No. Pursuant to Section 553.507 (1-2), Florida Statutes, multifamily residential dwellings such as rental apartments and residential condominiums (and their associated common use areas) that are not the recipients of government financial assistance or sponsorship (federal, state or local), are not subject to the Accessibility Code, with the exception of Section 553.504(2), unless they are places of public accommodation or commercial facilities."*

An exception to this would be discrete areas contained within multifamily residential dwellings that fall within the definitions of "place of public accommodation" or "commercial facilities," such as a leasing or sales office, restrooms and parking (and the accessible route that connects these elements). Such areas would be subject to the Accessibility Code unless otherwise exempted by the Accessibility Code.

only FACBC requirement for residential is:

553.504(2) Exceptions to applicability of the federal standards. *All new single-family houses, duplexes, triplexes, condominiums, and townhouses shall provide at least one bathroom, located with maximum possible privacy, where bathrooms are provided on habitable grade levels, with a door that has a 29-inch clear opening. However, if only a toilet room is provided at grade level, such toilet room must have a clear opening of at least 29 inches.*

Access Highlights:

- FHAA and ADA are NOT "Building Codes" they are Federal Civil Rights Law.
- ANSI A117.1 is a "standard"
  - does not in include 'scoping' which must be provided elsewhere.
- Only the FACBC is a code!
- ADA / FACBC rarely apply to housing (FHA/504)
  - but that doesn't mean you can ignore them
  - areas of public accommodation within housing must comply
- FHAA always (almost) applies to housing

  distinguishes between:
  - dwelling units, and
  - common areas

  applies different requirements to each

Access Highlights

- FHAA Scoping:
  1. requirements apply only to "covered multifamily dwellings" designed and constructed *for first occupancy* after March 13, 1991.
  2. "covered multifamily dwellings" = buildings with 4 or more units
     a. in buildings with elevators; ALL units are "covered"
     b. in buildings without an elevator; only "ground floor units" are covered.
  3. not covered: detached single family homes, duplexes & triplexes, or multi-story townhomes.

Access Highlights

- If a building was used previously for a nonresidential purpose, such as a warehouse, office building, or school, and is being converted to multifamily housing, the conversion is not covered.
  - The Fair Housing Act only applies to covered buildings for first occupancy after March 13, 1991. The regulations define "first occupancy" as *"a building that has never before been used for any purpose."*
  - The Fair Housing Act does not require any renovations to existing buildings. Its design requirements apply to new construction only.

Access Highlights

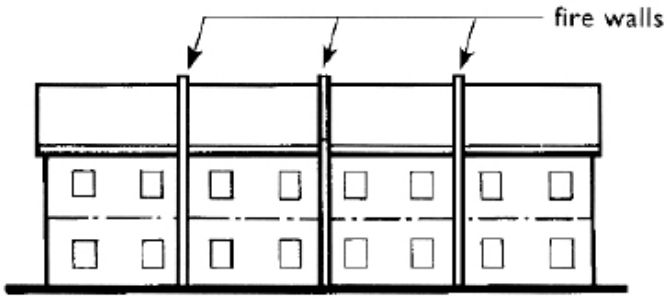

Building with Firewalls Is Treated as a Single Building

- Dwellings built within a single structure but separated by a firewall are treated under FHAA as a single building.

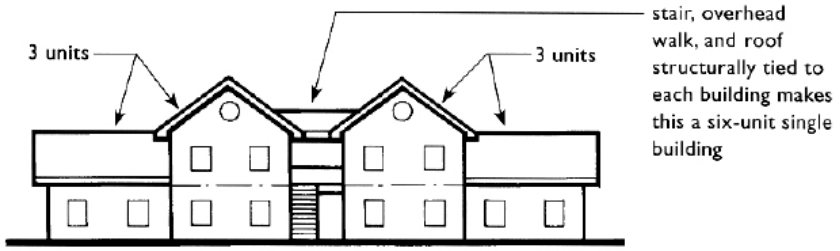

For Purposes of the Guidelines, Two Structurally Joined Buildings Are Treated as a Single Building

- Dwelling units connected, by stairs or a walkway that is structurally tied to the main body of the building, are also considered a single building and ground floor units in such buildings without elevators are covered.

Access Highlights

- Fair Housing Act:
  - compliance with the guidelines is not mandatory!
  - "purpose" section states:

> *"The Guidelines are to provide technical guidance on designing dwelling units that are in compliance with the Fair Housing Act and are not mandatory. Rather the Guidelines provide a safe harbor for compliance with the accessibility requirements of the Act."*
>
> *Builders and Developers may choose to depart from these Guidelines and seek alternate ways to demonstrate that they have met the requirements of the Fair Housing Act however, it is recommended that, if a designer or builder chooses to follow an accessibility standard other than the 1986 ANSI A117.1 Standard or a more recent version of the ANSI A117.1, such as the 1992 CABO/ANSI, that care be taken to ensure the standard used is at least equivalent to or stricter than the 1986 ANSI A117.1 Standard.*

Safe Harbors complying w/FHAA

- HUD Fair Housing Accessibility Guidelines *(March 6, 1991)* and, Supplemental Notice to Fair Housing Accessibility Guidelines: Questions and Answers about the Guidelines, *(June 28, 1994)*
- HUD Fair Housing Act Design Manual *(published to provide "guidance")*
- ANSI A117.1 (1986)
- CABO/ANSI A117.1 (1992),
- ICC/ANSI A117.1 (1998),
- *ANSI A117.1 (2003)*
- Code Requirements for Housing Accessibility 2000 (CRHA).
- International Building Code 2000 *(amended by 2001 Supplement to the I Codes.)*
- International Building Code 2003
- ICC/ANSI A117.1 (2003)
- International Building Code 2006, with January 31, 2007 Errata
- *Current rulemaking to add IBC 2009, 2012, 2015 and 2018*

All the above, when used with the Fair Housing Act, HUD's regulations, and the Guidelines. (safe-harbors most often used for common areas)

Important concepts

- "Accessible" vs. "Useable"
- "Adaptable"
  - concept that individual elements don't need to be accessible but made to be readily adaptable when needed by a user.
- Important distinctions in interpreting FHAA requirements.
  - level of accessibility required by the Fair Housing Act is relatively high on the site and in common use areas where compliance with much of the ANSI Standard is required.
  - accessibility is less stringent within the dwelling units where only specific features outlined in the Guidelines are required. In some instances, the specification is a modification of the related ANSI section, and in other instances the Guidelines substitute specifications.

Important concepts

- Reasonable Modifications
  - When a resident wishes to modify a dwelling unit under the reasonable modification provisions of the Fair Housing Act, the resident may do so. The landlord/manager may require that the modification be completed in a professional manner under the applicable building codes and may also require that the resident agree to restore the interior of the dwelling to the condition that existed before the modification, reasonable wear and tear excepted.
  - Residents also may make modifications to the public and common use spaces.

ANSI A117.1 - 1998 & 2003 Editions

- 103 Compliance Alternatives

  "Nothing in this standard is intended to prevent the use of designs, products, or technologies as alternatives to those prescribed by this standard, provided they result in equivalent or greater accessibility and such equivalency is approved by the administrative authority adopting this standard."

General Requirements

- Fair Housing Act: (requires)

use safe-harbor

1. Accessible building entrance on an accessible route.
2. Accessible and usable public and common-use areas.

use guidelines

3. Useable doors.
4. Accessible route into and through covered units.
5. Light switches, electrical outlets, thermostats, and other environmental controls in accessible locations.
6. Reinforced walls for later installation of grab bars.
7. Usable Kitchens and Bathrooms

always identify your intended safe-harbor AND stick to it!

Florida Accessibility Code for Building Construction:

areas of public accommodations, if any

applicability:

- retail spaces / Live-work units?
- leasing offices / model apartments?
- management / association office?
- building engineer's office / housekeeping spaces
  if subject to visitors/salespeople
- access from site and to/from related accessible parking

subject to:

- ADA
- FBC-Accessibility

accessible routes:

Requirement 1: Accessible building entrance on an accessible route

site to building *(or dwelling unit)* entrances & between site elements:

common elements: **FHAA safe-harbor**

lobby, gym, multi-purpose room, pool, recreation areas, corridors, toilet rooms, mail room

public accommodations: **FHAA safe-harbor + FACBC**

live-work units, retail (mercantile) spaces, leasing offices, model apartments, management offices

parking requirements

Requirement 2: Accessible and useable public and common use areas

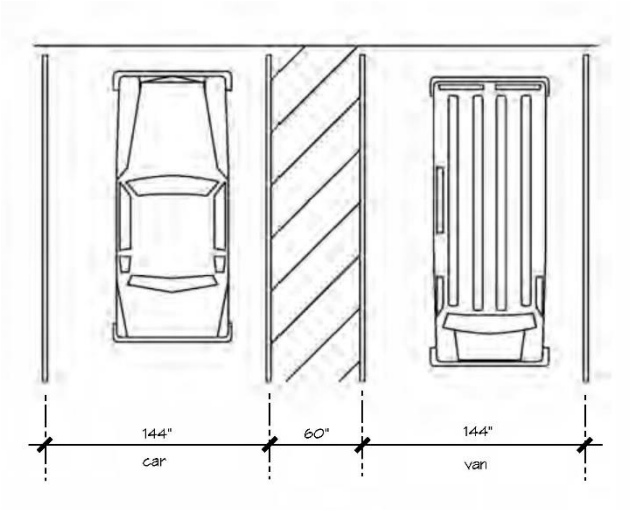

FBC-Accessibility: *(Florida specific size requirement)*

no. required 2-4% of total parking provided

144” (12’) min. space width

1.5 times larger than other standards

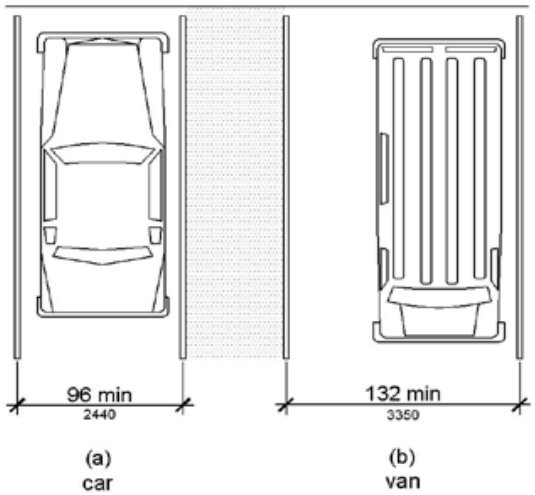

FHAA: *(ANSI A117.1 or ADA size requirement)*

no. required 2% of no. of spaces serving covered units

provide: min. of 1 of each type provided
min. of 1 at each remote site amenity
if visitor pkg is provided, then sufficient no. to provide access to grade level entrances of covered dwellings
min. of 1 at sales/rental office

parking requirements

Requirement 2: Accessible and useable public and common use areas

in mixed uses, you can mix standards:

commercial (public) uses must meet FACBC, but

if properly segregated,

dwelling and common area requirements can use ANSI standards

1. provide publicly available parking at required ratio for commercial use
   a. *follow number and size per FACBC*
2. provide limited access parking for tenants only at required ratio
   a. *follow number and size per Safe-harbor*

accessible routes:

Requirement 2: Accessible and useable public and common use areas

entry doors *(dwelling units)*:

exterior side: *(FHAA safe-harbor ANSI A117.1 or equivalent)*

- provide maneuvering clearance
- accessible lever lockset
- min. clear width = 32” open at 90 degrees

interior side: *(FHAA guidelines)*

- no maneuvering clearance requirement
- accessible lever lockset

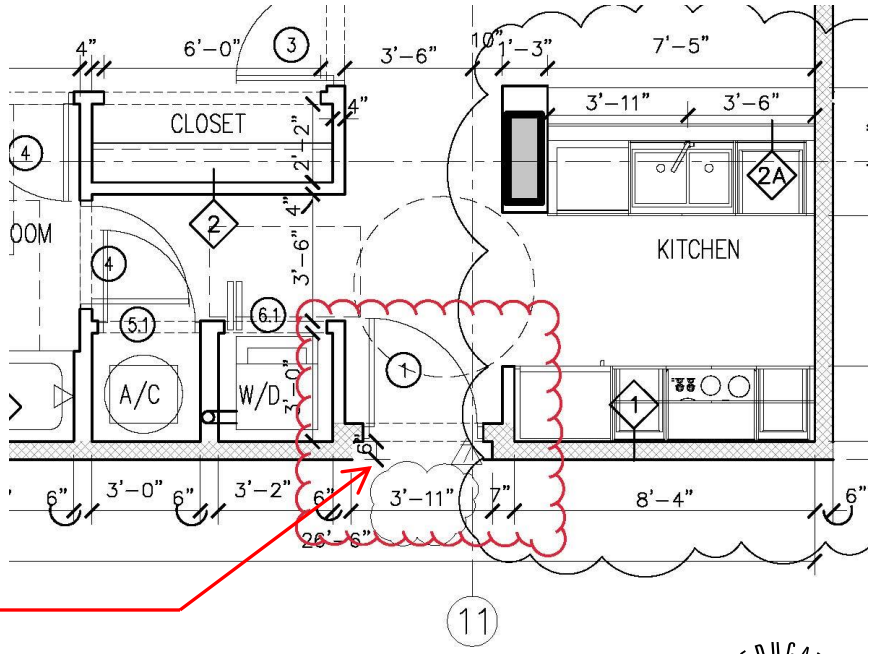

don’t miss the details

- in this instance, the text clearly says the measurement is taken from the wall face
- means you must include the depth of the frame – if in-swinging
- this was the intention

check this out

accessible routes:

Requirement 2: Accessible and useable public and common use areas

Recessed doors:

404.2.4.3 Recessed Doors. *Maneuvering clearances for forward approach shall be provided when any obstruction within 18 inches (455 mm) of the latch side of a doorway projects more than 8 inches (205 mm)* ***beyond the face of the door, measured perpendicular to the face of the door or gate***

this was the result

- in-swinging door in a 6” wall, produces an 8” frame depth with the rabbet 6-1/2” from the face of the door!
- add the 6” built-out wall and you’ve got a non-compliant 12” recess

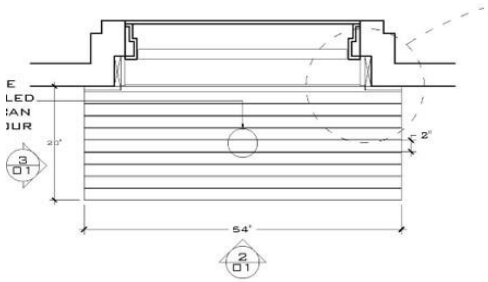





accessible routes:

Requirement 2: Accessible and useable public and common use areas

Maneuvering clearance:

404.2.4 Maneuvering Clearances. *Per Table 404.2.4.1*

this probably looked good on paper

- don't forget that nothing can be in maneuvering clearance of doors AND that the clearance extends outward (perpendicular) to the door!





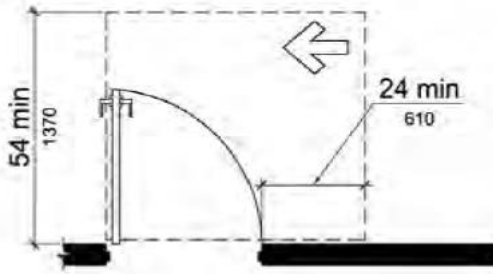

(i)
latch approach, pull side,
door provided with closer

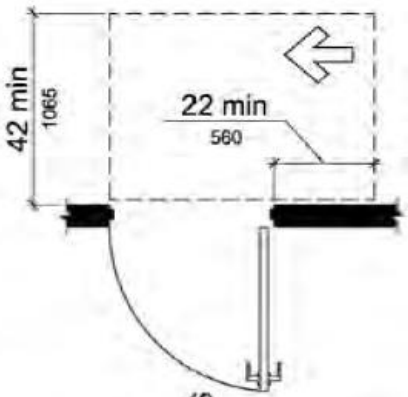

(f)
hinge approach, push side

accessible routes:

Requirement 2: Accessible and useable public and common use areas

Maneuvering clearance:

404.2.4 Maneuvering Clearances. *Per Table 404.2.4.1*

this probably looked good on paper

- don't forget that nothing can be in maneuvering clearance of doors AND that the clearance extends outward (perpendicular) to the door!

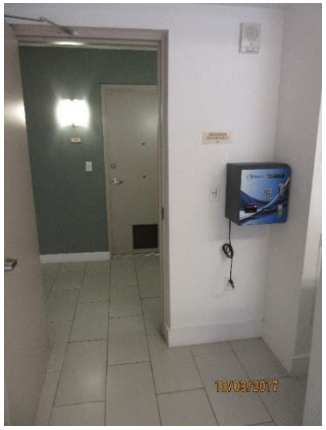



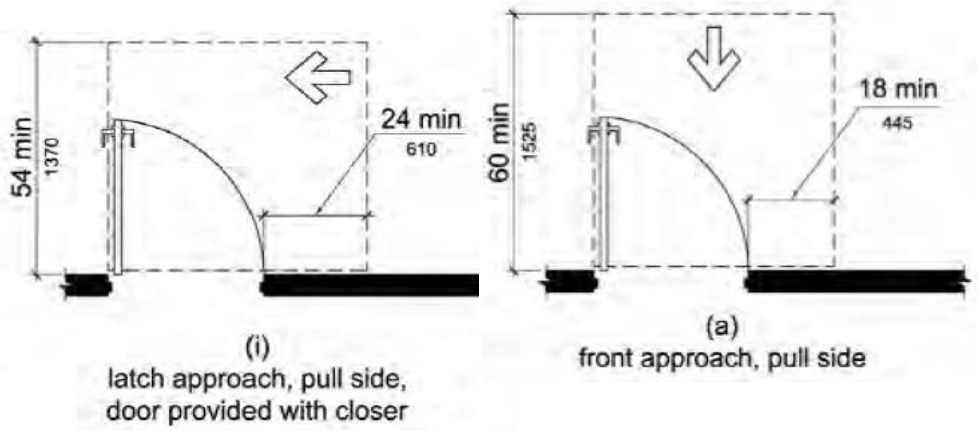

accessible routes:

Requirement 2: Accessible and useable public and common use areas

Maneuvering clearance:

404.2.4 Maneuvering Clearances. *Per Table 404.2.4.1*

this probably looked good on paper

remember, gates require maneuvering clearance TOO!

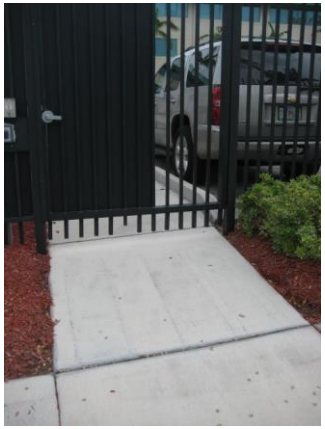







accessible routes:

Requirement 2: Accessible and useable public and common use areas

Railing extensions:

505.10 Handrail Extensions. *Handrail gripping surfaces shall extend beyond and in the same direction of stair flights and ramp runs in accordance with 505.10.*

EXCEPTIONS: *3. In alterations, full extensions of handrails shall not be required where such extensions would be hazardous due to plan configuration.*

- not applicable in new design work – design it right!

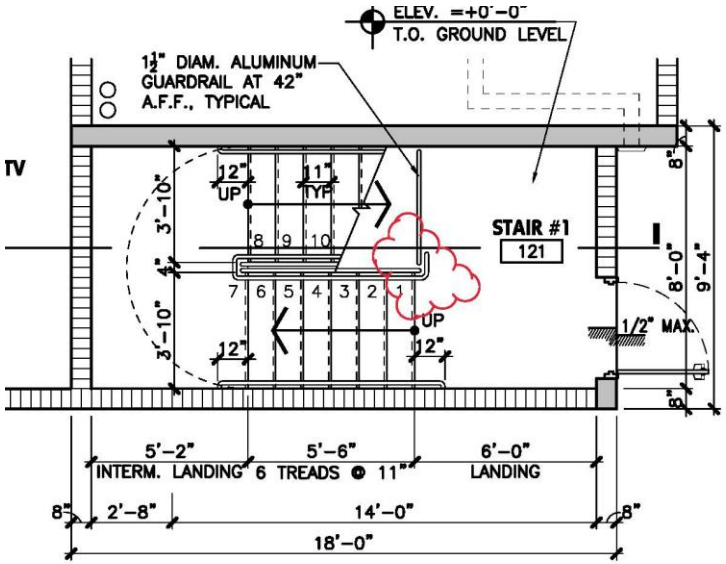

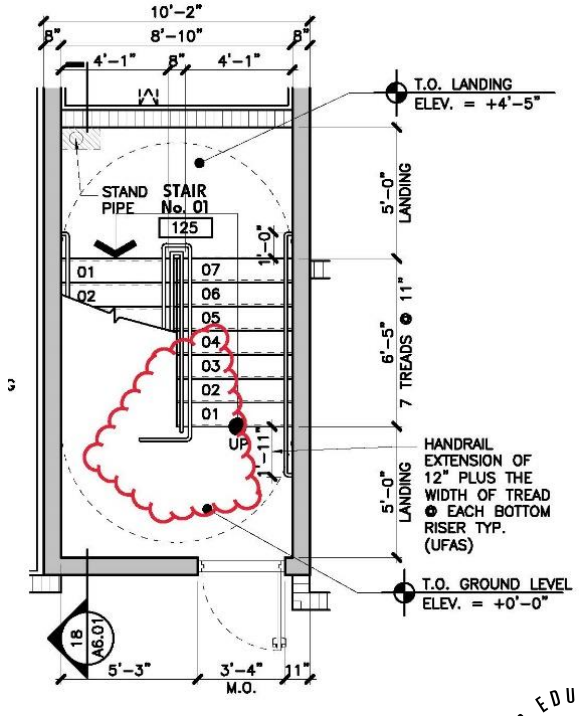

accessible routes:

Requirement 2: Accessible and useable public and common use areas

Railing extensions:

505.10 Handrail Extensions. *Handrail gripping surfaces shall extend beyond and in the same direction of stair flights and ramp runs in accordance with 505.10.*

EXCEPTIONS: *3. In alterations, full extensions of handrails shall not be required where such extensions would be hazardous due to plan configuration.*

this only applies on existing buildings!



accessible routes:

Requirement 3: Useable Doors

accessible doors *(public & common use spaces & public side of dwelling unit entry door)*

(safe-harbor ANSI A117.1 or equivalent)

- min. clear width = 32” open at 90 degrees
- provide maneuvering clearance
- accessible lever lockset

useable doors *(within interior of dwelling unit)*

(follow guidelines)

- provide nominal clear width = 32” open at 90 degrees
- 1/4” to 3/8” considered acceptable range (31-5/8” min. width)
- no additional requirement (except low or no threshold)

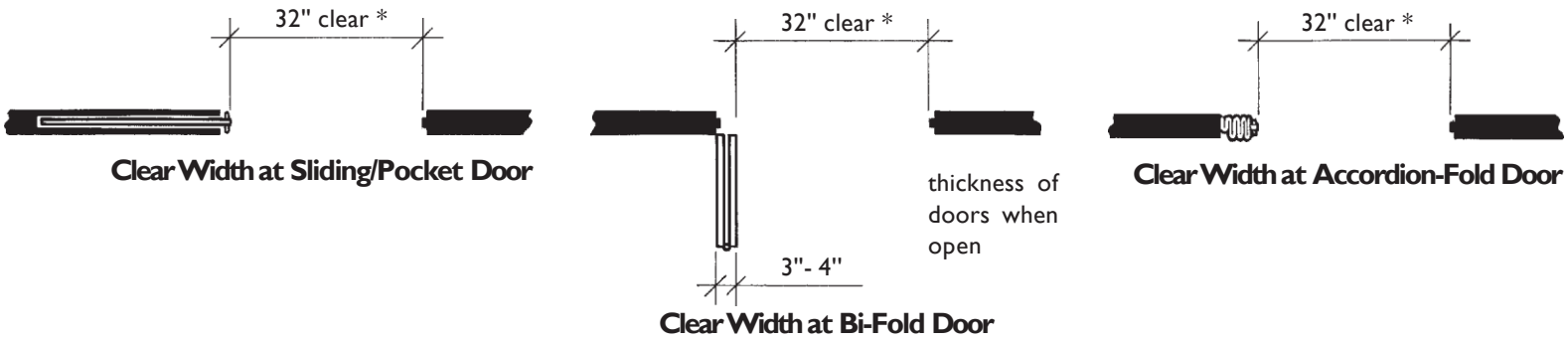

accessible routes:

Requirement 3: Useable Doors

closets

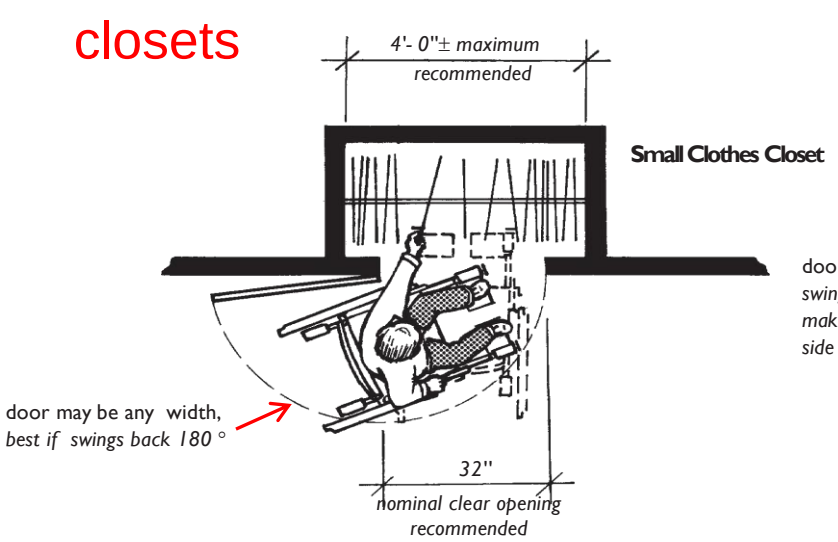

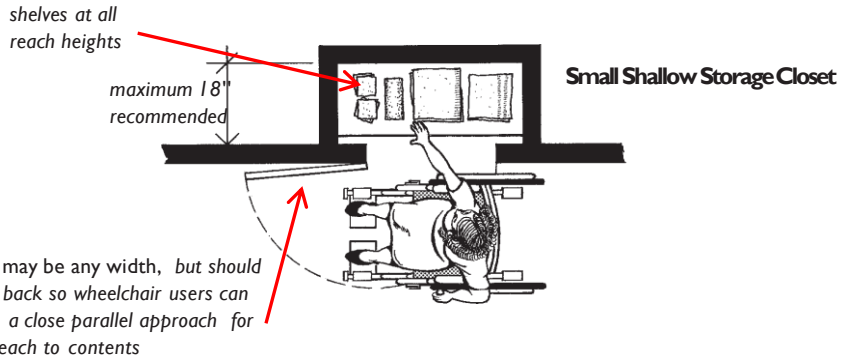

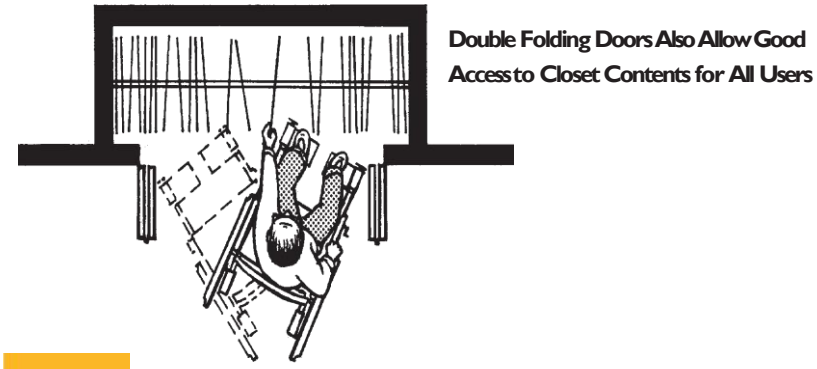

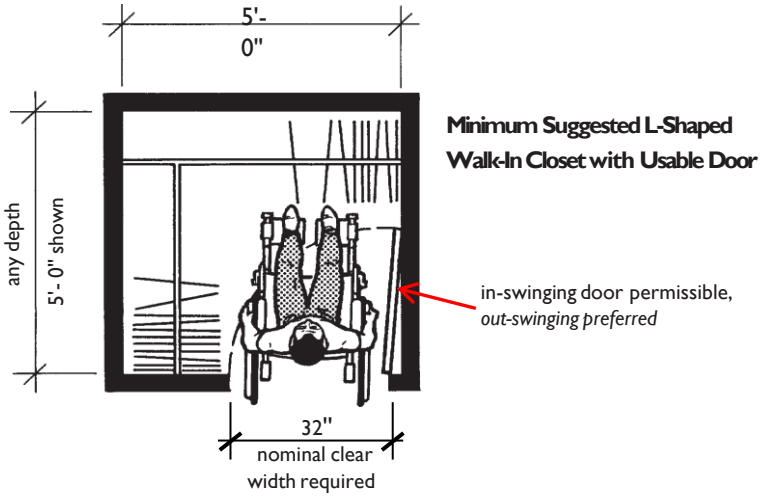

accessible routes:

Requirement 4: Accessible Route into and through the Covered Unit

routes through units

- must pass through the main entry door and,
- continue through all rooms in the unit *(including storage areas)* and,
- adjoin required clear floor spaces at all kitchen appliances and all bathroom fixtures and,
- connect with all secondary exterior doors.
- must be 36” wide *(may be reduced to 32” nominal clear width)*
- connect with the clear floor space outside the primary entry door.

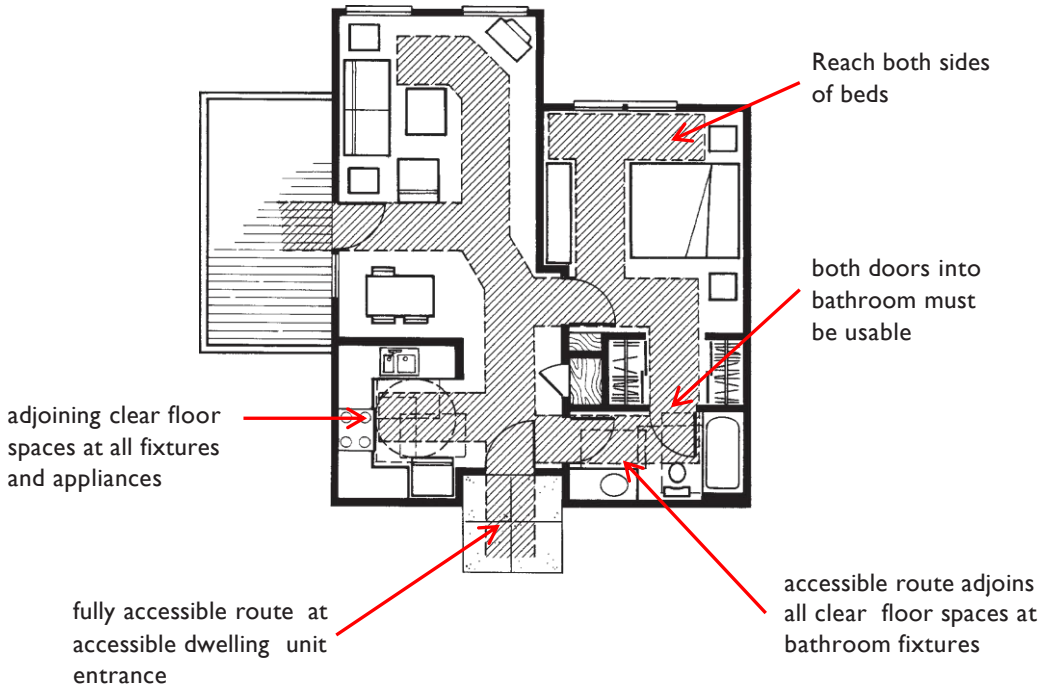

accessible routes:

Requirement 4: Accessible Route into and through the Covered Unit

routes through units

- must pass through the main entry door and,
- continue through all rooms in the unit *(including storage areas)* and,
- adjoin required clear floor spaces at all kitchen appliances and all bathroom fixtures and,
- connect with all secondary exterior doors.
- must be 36” wide *(may be reduced to 32” nominal clear width)*
- connect with the clear floor space outside the primary entry door.

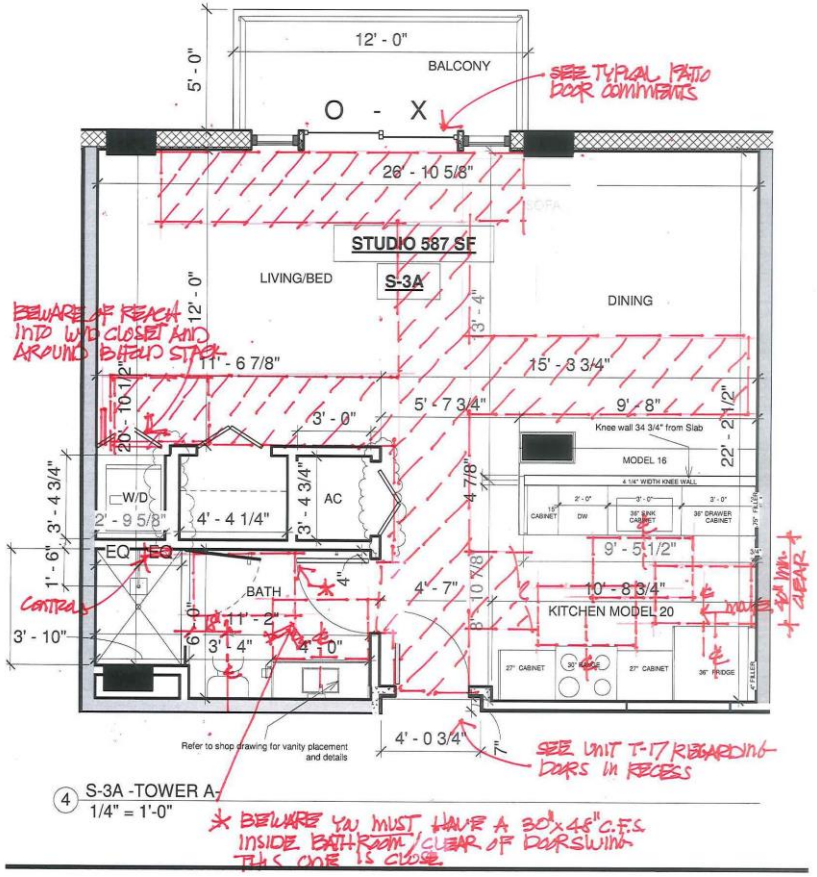

accessible routes:

Requirement 4: Accessible Route into and through the Covered Unit

entry doors *(dwelling units)*

primary entry door
(discussed prior – Reqm't. 2)

secondary exterior doors *(providing passage to exterior decks, patios, balconies)*

- must be "useable."
- provide nominal clear width = 32" open at 90 degrees
- threshold maximum = 3/4" high
- doors to exterior decks, patios or balcony surfaces allowed a 4-inch maximum step to prevent water infiltration if the exterior surface is of impervious material. *(1/2" if pervious)*
  - *measured as change in level from interior floor to exterior floor!*

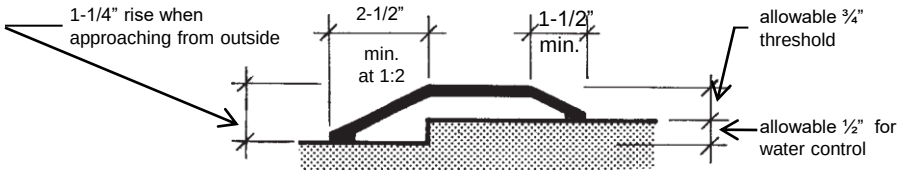

1 Acceptable
(not preferred)

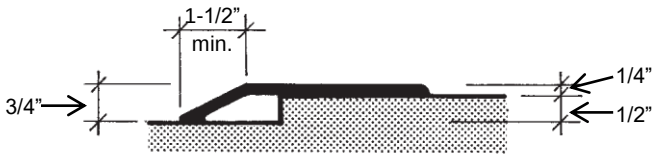

2 Acceptable

accessible routes:

Requirement 4: Accessible route through the Covered Unit

secondary exterior doors *(providing passage to exterior decks, patios, balconies)*

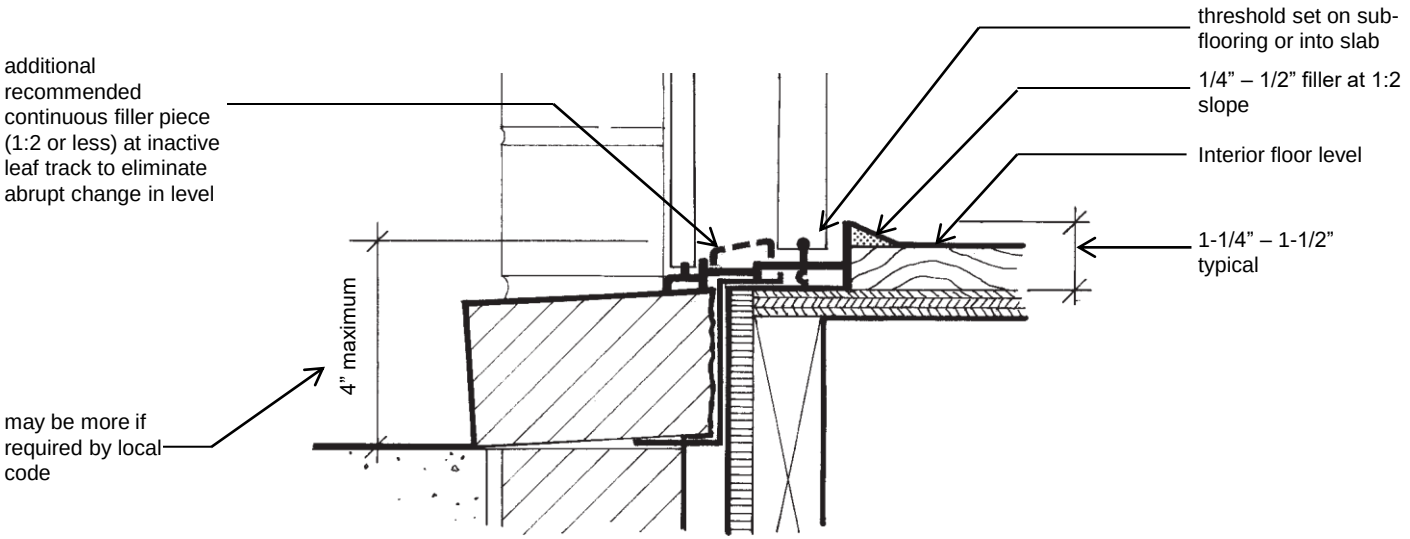

useable kitchens:

Requirement 7A: Useable Kitchens

specify 3 specific requirements *(must be provided)*

1. specify minimum clear floor spaces at fixtures and appliances
   - 30” x 48” clear floor space *(either parallel or perpendicular)*
     - *unless knee space is provided, a parallel approach must be provided*
   - must have its centerline aligned with centerline of fixture or appliance
   - be connected to the 36” accessible route *(may overlap)*

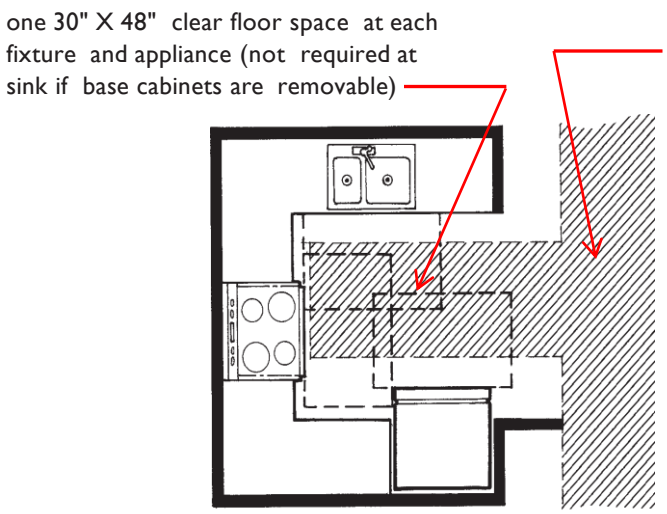

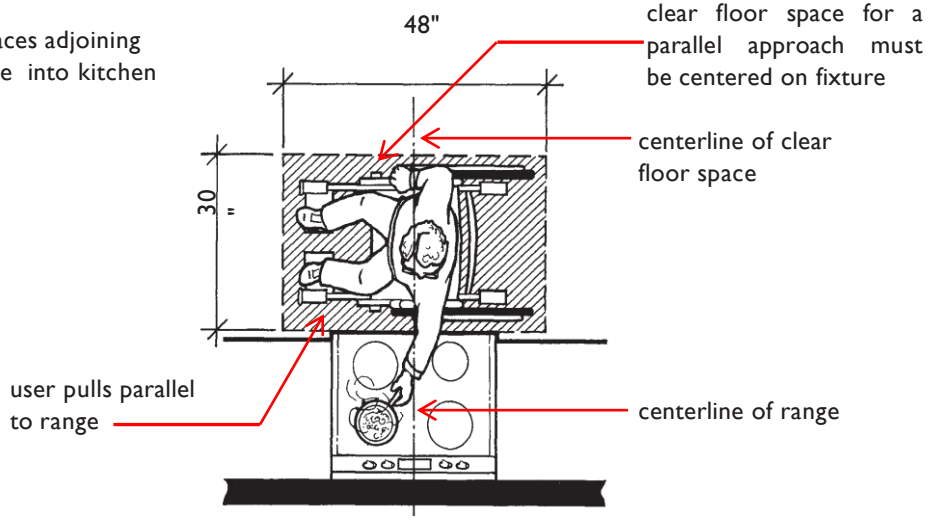

useable kitchens:

Requirement 7A: Useable Kitchens

specify 3 specific requirements *(must be provided)*

2. define minimum clearance between counters
   - 40” minimum clearance between all opposing base cabinets, countertops, appliances, and walls *(measured from any countertop or the face of any appliance – excluding handles and controls)*
   - 60” minimum turning circle is required in U-shape kitchen that has a sink, range, or cooktop at its base *(necessary for person in wheelchair to position themselves parallel to the appliance)*

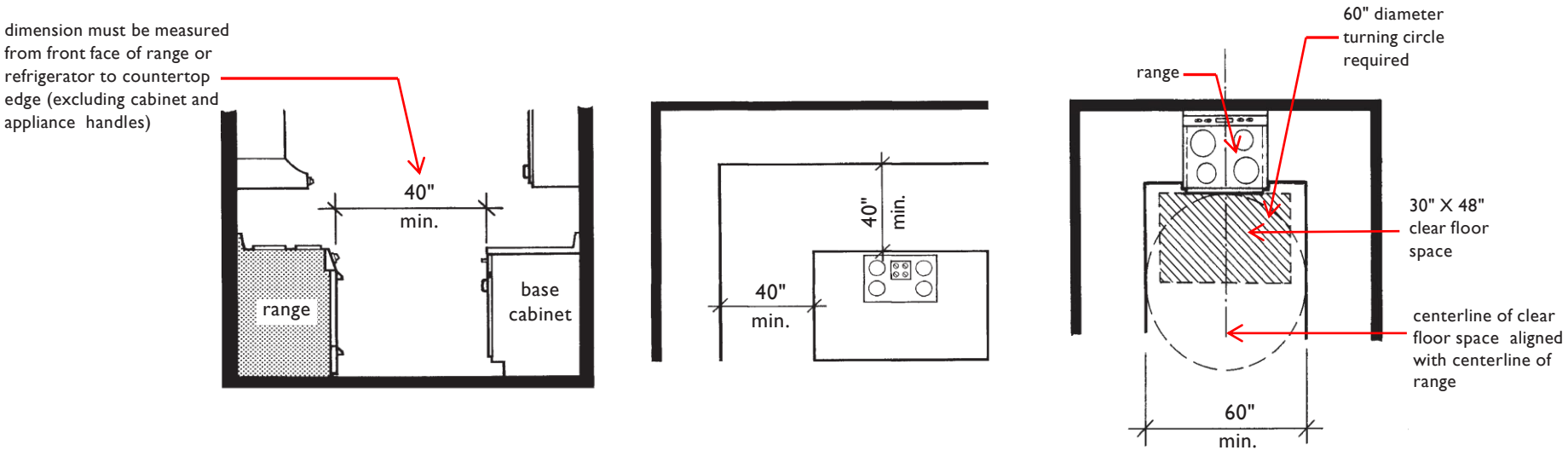

useable kitchens:

Requirement 7A: Useable Kitchens

specify 3 specific requirements *(must be provided)*

3. provide additional specifications when a U-shaped kitchen is planned

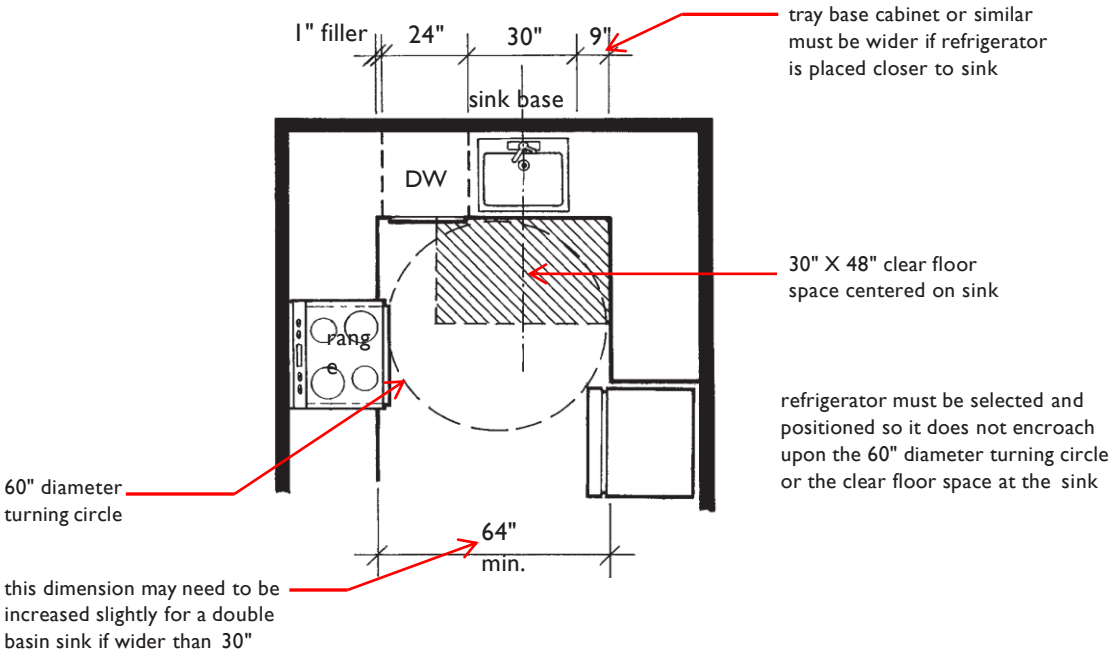

useable kitchens:

Requirement 7A: Useable Kitchens

specify 3 specific requirements *(must be provided)*

3. exception:
   - when removable base cabinets are provided under cooktop or sink, a clearance of at least 40” is required *(not possible at ranges)*

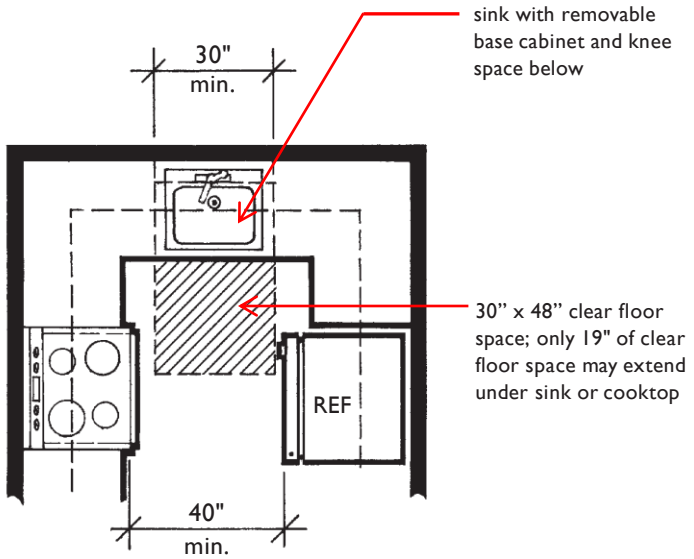

useable kitchens

Requirement 7A: Useable Kitchens

Obstructed high reach:

- when objects have to be reached over counters, such as outlets or switches, we all know they need to be lower, BUT
- there is a maximum limit to that reach!



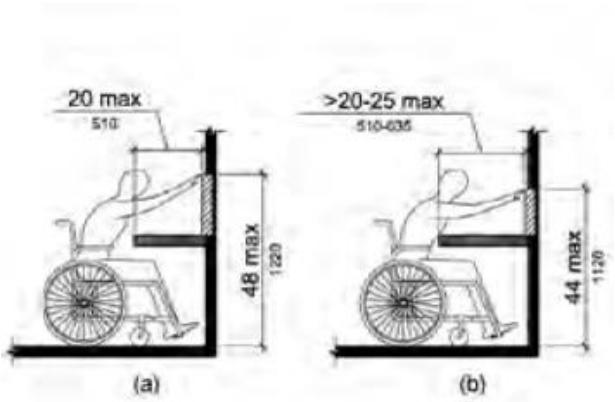

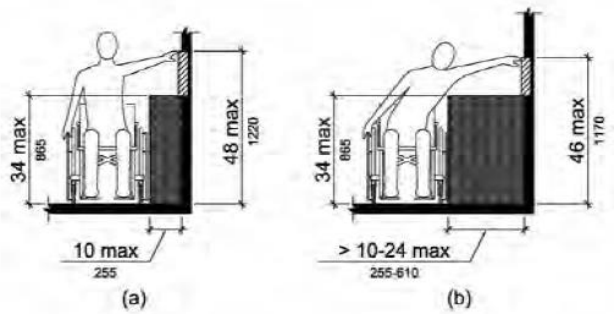



useable bathrooms:

Requirement 7B: Useable Bathrooms

specifications require

1. an accessible route to and into the bathroom
   - nominal 32-inch clear door opening
2. switches, outlets and controls in accessible locations
3. reinforced walls to allow for later installation of grab bars
   - nominal 32-inch clear door opening
4. maneuvering space within the bathroom to permit a person to enter the room, close and reopen the door, and exit
5. maneuvering and clear floor space within the bathroom to permit a person to approach and use fixtures

useable bathrooms:

Requirement 7B: Useable Bathrooms

two bathroom specifications:

1. Specification A:
   - if Specification A is selected as the basis for design of bathroom, then ALL bathrooms in dwelling unit must comply with A.
   - where multiple fixtures are provided, ALL must be useable. *(provide clear floor space for each)*
   - must have 30” x 48” clear floor space in the room and clear of the floor swing

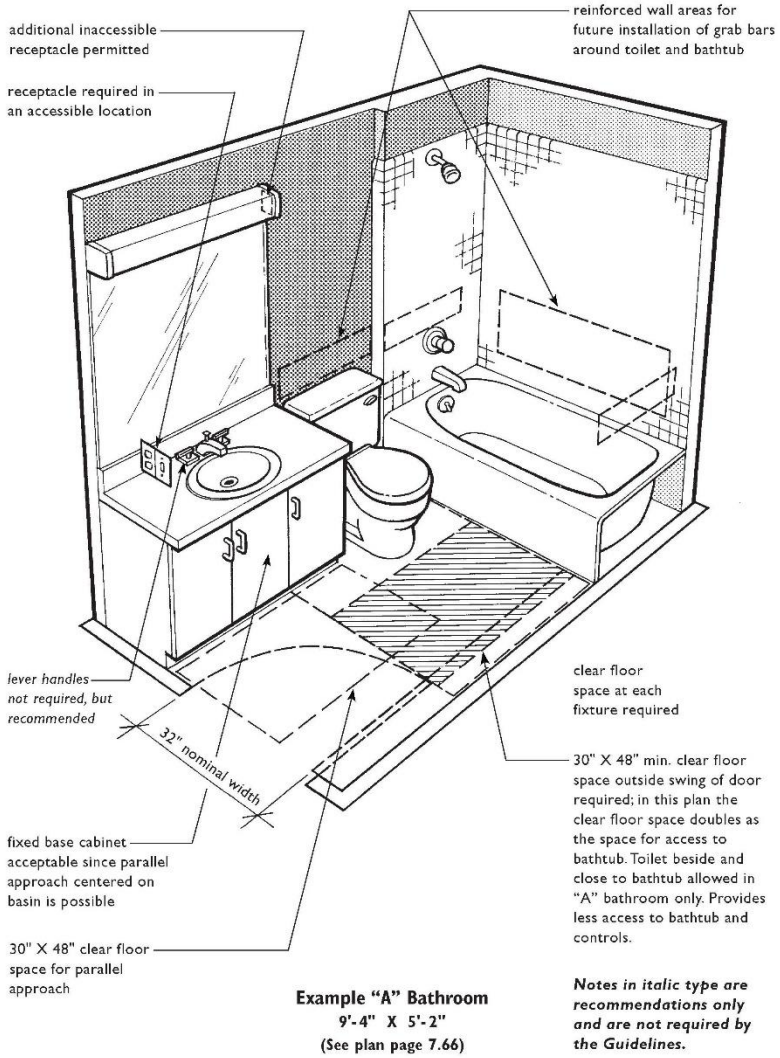

useable bathrooms:

Requirement 7B: Useable Bathrooms

two bathroom specifications:

2. Specification B:
   - if Specification B is selected, only one bathroom in the dwelling unit must meet those requirements; all others must be on an accessible route, have nominal 32” wide doors, have switches, outlets, and controls in accessible locations, and have reinforced walls.
   - greater access to the bathtub than a bathroom designed to Specification A
   - must have 30” x 48” clear floor space in the room and clear of the floor swing

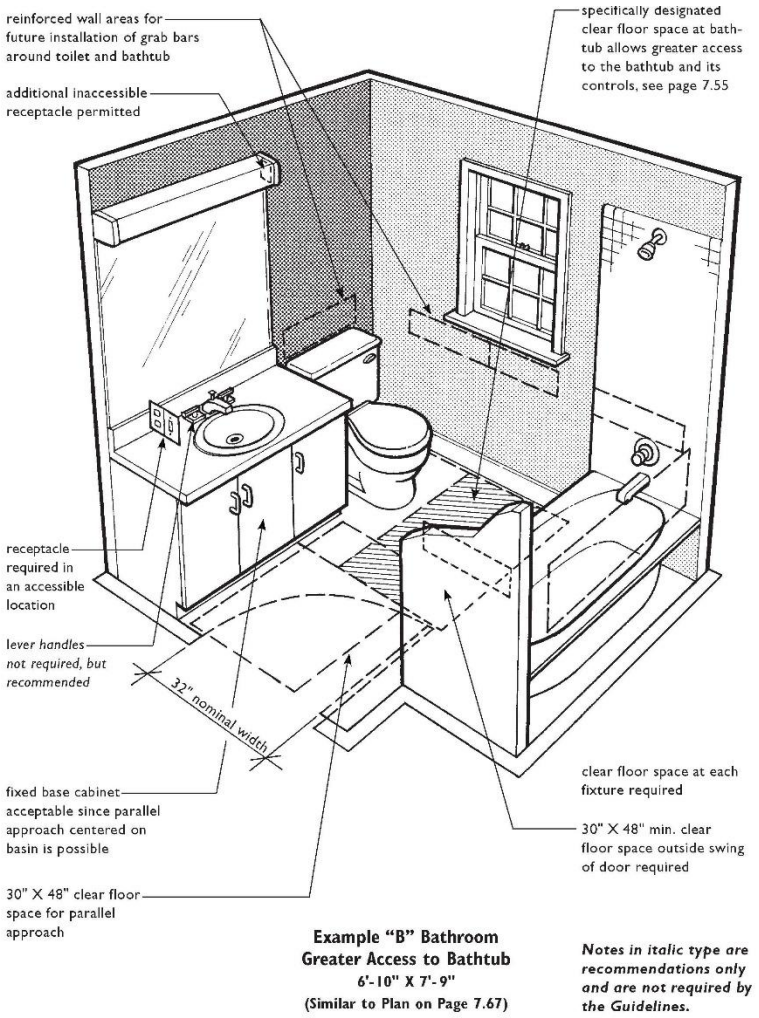

useable bathrooms:

Requirement 7B: Useable Bathrooms

water closet clear floor space

- when planning both Spec A and B bathrooms, one of the following clear floor spaces must be provided.

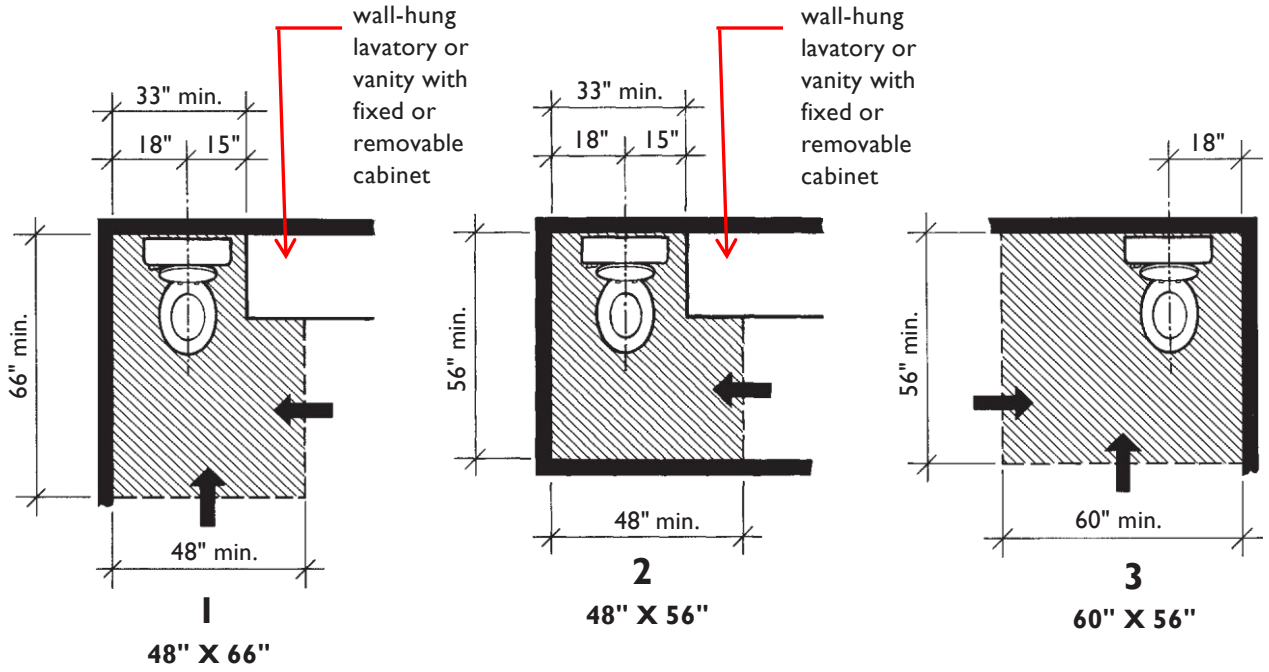

useable bathrooms:

Requirement 7B: Useable Bathrooms

water closet clear floor space

- watch out for wing wall limitations.

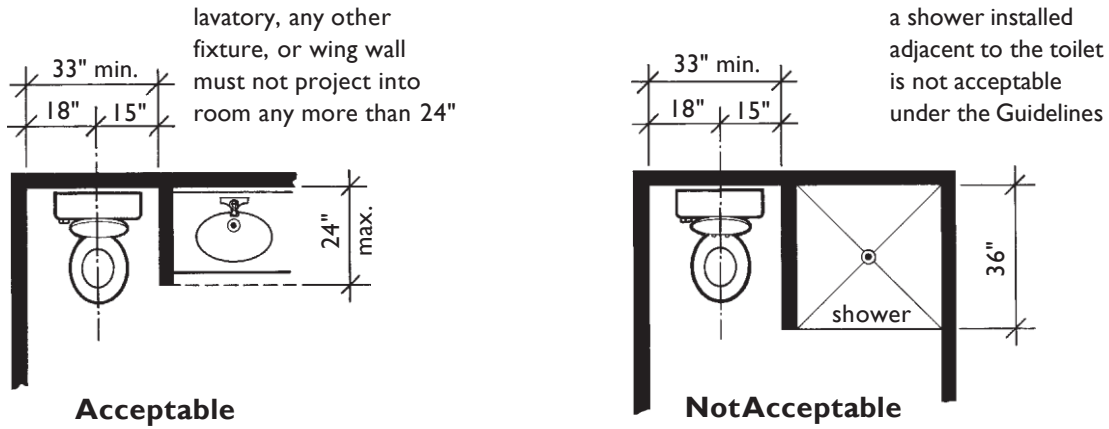

Some Features May Overlap Clear Floor Space at Toilet

useable bathrooms:

Requirement 7B: Useable Bathrooms

clear floor space at lavatories

- centerline of c.f.s. must be aligned with centerline of bowl.

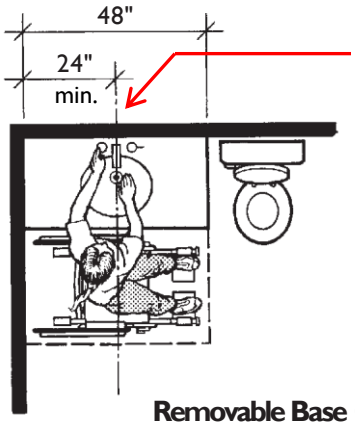

Removable Base Cabinet Not Required Because Clear Floor Space Centered on Basin (Applicable in A and B Bathrooms)

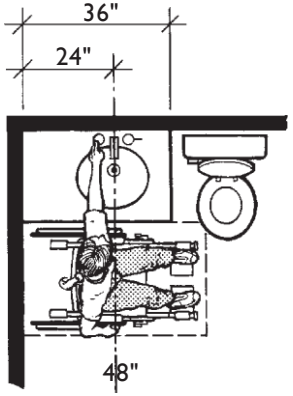

to Reduce Lavatory Length (Applicable in A and B Bathrooms)

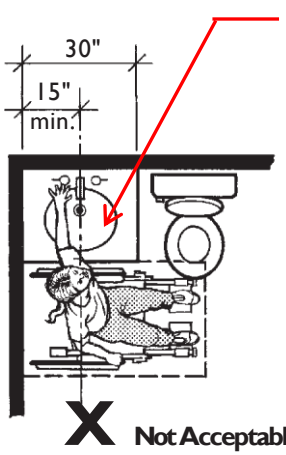

Not Acceptable for Parallel Approach

Removable Base Cabinet Must Be Provided Because Clear Floor Space Can Not Be Centered (Required in A and B Bathrooms)

useable bathrooms:

Requirement 7B: Useable Bathrooms

clear floor space at tubs and showers

- centerline of c.f.s. must be aligned with centerline of bowl.

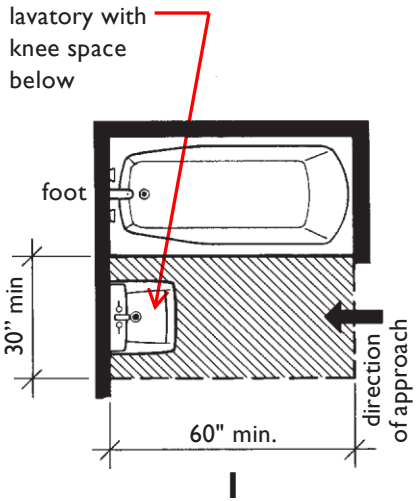

1

Specification "A" Bathrooms 30" X 60"

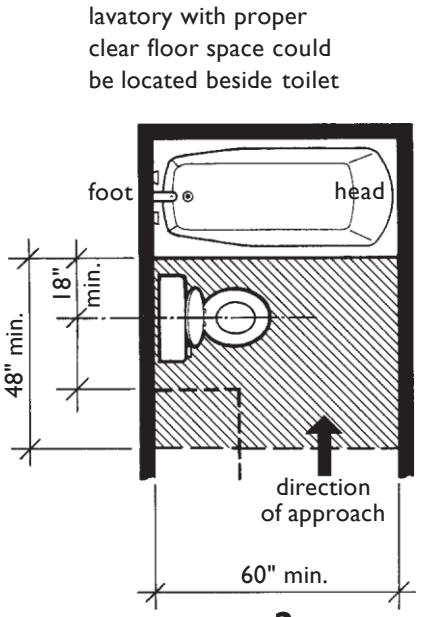

2

Specification "A" Bathrooms 48" X 60"

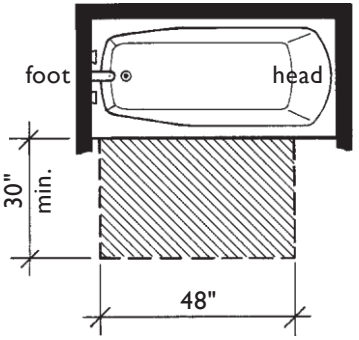

3

Specification "B" Bathrooms 30" X 48"

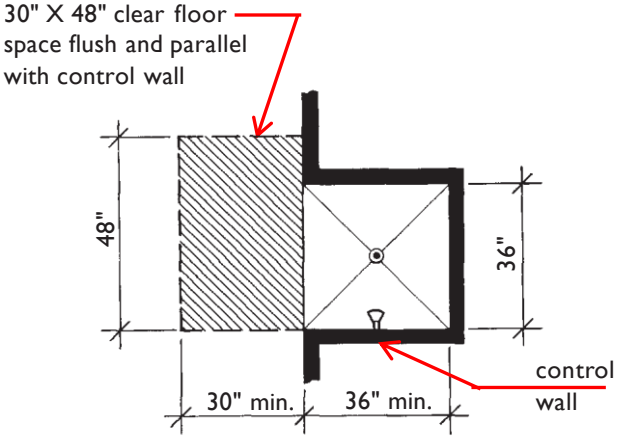

Guideline Requirements for Clear Floor Space at Showers

questions?

Thank You!

miker@rodriguezarchitects.com

This concludes The American Institute of Architects
Continuing Education Systems Course



AIA
Florida

104 East Jefferson Street,
Tallahassee, FL 323011

850-222-7590

Technical Assistance on the FHAA

- Fair Housing Information Clearinghouse HUD Web Site
  - Provides Information Regarding the Fair Housing Act and Private Accessible Housing
  - Web Home Page: www.fairhousingfirst.org